SN74ALVC164245 16-Bit 2.5-V to 3.3-V or 3.3-V to 5-V Level-Shifting Transceiver With 3-State Outputs

1 Features

- Member of the Texas Instruments Widebus™ Family
- Maximum t_{pd} of 5.8 ns at 3.3 V
- ±24-mA Output Drive at 3.3 V
- Control Inputs V_{IH}/V_{IL} Levels Are Referenced to V_{CCA} Voltage
- Latch-Up Performance Exceeds 250 mA Per JESD 17

2 Applications

- Electronic Points of Sale
- Printers and Other Peripherals
- Motor Drives
- Wireless and Telecom Infrastructures
- Wearable Health and Fitness Devices

3 Description

This 16-bit (dual-octal) noninverting bus transceiver contains two separate supply rails. B port has V_{CCB}, which is set to operate at 3.3 V and 5 V. A port has V_{CCA}, which is set to operate at 2.5 V and 3.3 V. This allows for translation from a 2.5-V to a 3.3-V environment, and vice versa, or from a 3.3-V to a 5-V environment, and vice versa.

The SN74ALVC164245 is designed for asynchronous communication between data buses. The control circuitry (1DIR, 2DIR, $1\overline{OE}$, and $2\overline{OE}$) is powered by V_{CCA}.

To ensure the high-impedance state during power up or power down, the output-enable ($\overline{OE}$) input should be tied to V_{CC} through a pullup resistor; the minimum value of the resistor is determined by the current-sinking capability of the driver.

The logic levels of the direction-control (DIR) input and the output-enable ($\overline{OE}$) input activate either the B-port outputs or the A-port outputs or place both output ports into the high-impedance mode. The device transmits data from the A bus to the B bus when the B-port outputs are activated, and from the B bus to the A bus when the A-port outputs are activated. The input circuitry on both A and B ports always is active and must have a logic HIGH or LOW level applied to prevent excess I_{CC} and I_{CCZ}.

Device Information(1)

PART NUMBER	PACKAGE	BODY SIZE (NOM)
SN74ALVC164245	TSSOP (48)	12.50 mm × 6.10 mm
	SSOP (48)	15.88 mm × 7.49 mm
	BGA MICROSTAR JUNIOR (56)	7.00 mm × 4.50 mm
	BGA MICROSTAR JUNIOR (54)	8.00 mm × 5.50 mm

(1) For all available packages, see the orderable addendum at the end of the data sheet.

Logic Diagram (Positive Logic)

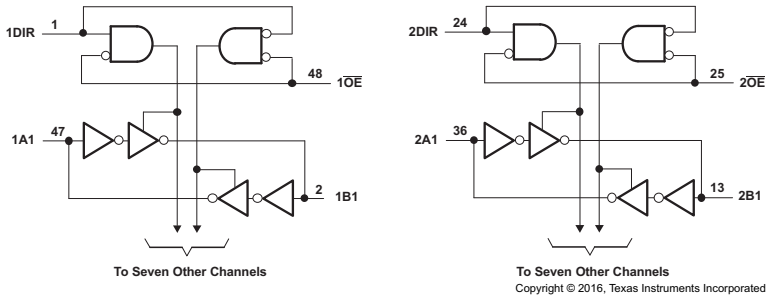

Copyright © 2016, Texas Instruments Incorporated

An IMPORTANT NOTICE at the end of this data sheet addresses availability, warranty, changes, use in safety-critical applications, intellectual property matters and other important disclaimers. PRODUCTION DATA.

Table of Contents

1 Features ... 1
2 Applications ... 1
3 Description ... 1
4 Revision History ... 2
5 Pin Configuration and Functions ... 3
6 Specifications ... 7
6.1 Absolute Maximum Ratings ... 7
6.2 ESD Ratings ... 7
6.3 Recommended Operating Conditions: V_{CCB} at 3.3 V ... 7
6.4 Recommended Operating Conditions: V_{CCA} at 2.5 V ... 8
6.5 Thermal Information ... 8
6.6 Electrical Characteristics: V_{CCA} = 2.7 V to 3.6 V ... 9
6.7 Electrical Characteristics: V_{CCA} = 2.3 V to 2.7 V ... 10
6.8 Switching Characteristics ... 10
6.9 Operating Characteristics ... 10
6.10 Typical Characteristics ... 11
7 Parameter Measurement Information ... 12
7.1 V_{CCA} = 2.5 V ± 0.2 V to V_{CCB} = 3.3 V ± 0.3 V ... 12
7.2 V_{CCB} = 3.3 V ± 0.3 V to V_{CCA} = 2.5 V ± 0.2 V ... 13
7.3 V_{CCA} = 3.3 V ± 0.3 V to V_{CCB} = 5 V ± 0.5 V ... 14
7.4 V_{CCB} = 5 V ± 0.5 V to V_{CCA} = 2.7 V and 3.3 V ± 0.3 V ... 15
8 Detailed Description ... 16
8.1 Overview ... 16
8.2 Functional Block Diagram ... 16
8.3 Feature Description ... 16
8.4 Device Functional Modes ... 16
9 Application and Implementation ... 17
9.1 Application Information ... 17
9.2 Typical Application ... 17
10 Power Supply Recommendations ... 19
11 Layout ... 19
11.1 Layout Guidelines ... 19
11.2 Layout Example ... 19
12 Device and Documentation Support ... 20
12.1 Documentation Support ... 20
12.2 Receiving Notification of Documentation Updates ... 20
12.3 Community Resource ... 20
12.4 Trademarks ... 20
12.5 Electrostatic Discharge Caution ... 20
12.6 Glossary ... 20
13 Mechanical, Packaging, and Orderable Information ... 20

4 Revision History

Changes from Revision P (November 2005) to Revision Q **Page**

- Added *ESD Ratings* table, *Feature Description* section, *Device Functional Modes*, *Application and Implementation* section, *Power Supply Recommendations* section, *Layout* section, *Device and Documentation Support* section, and *Mechanical, Packaging, and Orderable Information* section ... 1
- Deleted *Ordering Information* table; see POA at the end of the data sheet ... 1
- Changed values in the *Thermal Information* table to align with JEDEC standards ... 8

Copyright © 1994–2016, Texas Instruments Incorporated

5 Pin Configuration and Functions

DGG and DL Packages
48-Pin TSSOP and BGA MICROSTAR JUINIOR
Top View

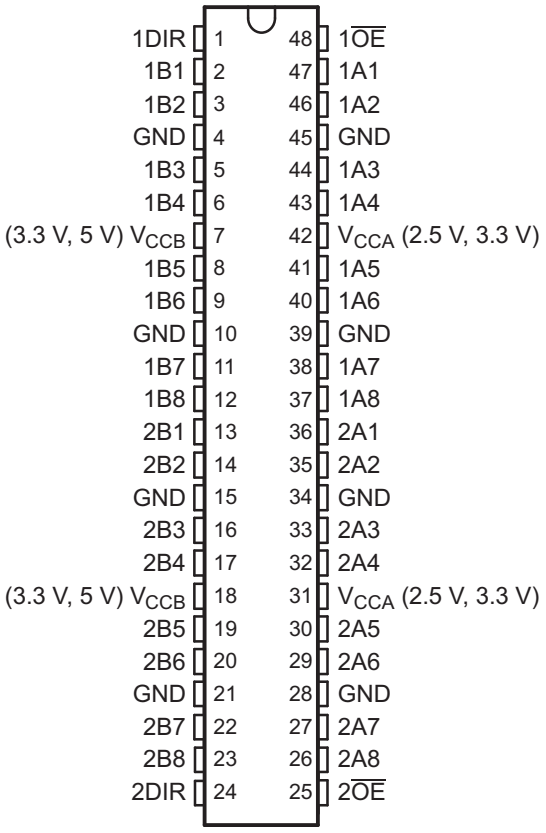

Pin Functions

PIN		I/O	DESCRIPTION
NO.	NAME		
1	1DIR	—	Direction Pin 1
2	1B1	I/O	1B1 input or output
3	1B2	I/O	1B2 input or output
4	GND	—	Ground pin
5	1B3	I/O	1B3 input or output
6	1B4	I/O	1B4 input or output
7	V_{CCB} (3.3 V, 5 V)	—	Power pin
8	1B5	I/O	1B5 input or output
9	1B6	I/O	1B6 input or output
10	GND	—	Ground pin
11	1B7	I/O	1B7 input or output
12	1B8	I/O	1B8 input or output
13	2B1	I/O	2B1 input or output
14	2B2	I/O	2B2 input or output
15	GND	—	Ground pin
16	2B3	I/O	2B3 input or output

Copyright © 1994–2016, Texas Instruments Incorporated

Pin Functions (continued)

PIN		I/O	DESCRIPTION
NO.	NAME		
17	2B4	I/O	2B4 input or output
18	V_{CCB} (3.3 V, 5 V)	—	Power pin
19	2B5	I/O	2B5 input or output
20	2B6	I/O	2B6 input or output
21	GND	—	Ground pin
22	2B7	I/O	2B7 input or output
23	2B8	I/O	2B8 input or output
24	2DIR	—	Direction pin 2
25	$2\overline{OE}$	I	Output Enable 2
26	2A8	I/O	2A8 input or output
27	2A7	I/O	2A7 input or output
28	GND	—	Ground pin
29	2A6	I/O	2A6 input or output
30	2A5	I/O	2A5 input or output
31	V_{CCA} (2.5 V, 3.3 V)	—	Power pin
32	2A4	I/O	2A4 input or output
33	2A3	I/O	2A3 input or output
34	GND	—	Ground pin
35	2A2	I/O	2A2 input or output
36	2A1	I/O	2A1 input or output
37	1A8	I/O	1A8 input or output
38	1A7	I/O	1A7 input or output
39	GND	—	Ground pin
40	1A6	I/O	1A6 input or output
41	1A5	I/O	1A5 input or output
42	V_{CCA} (2.5 V, 3.3 V)	—	Power pin
43	1A4	I/O	1A4 input or output
44	1A3	I/O	1A3 input or output
45	GND	—	Ground pin
46	1A2	I/O	1A2 input or output
47	1A1	I/O	1A1 input or output
48	$1\overline{OE}$	I	Output Enable 1

Copyright © 1994–2016, Texas Instruments Incorporated

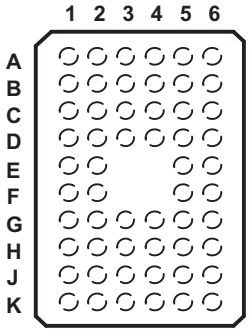

Table 1. Pin Assignments(1)
(56-Ball GQL or ZQL Package)

	1	2	3	4	5	6
A	1DIR	NC	NC	NC	NC	$1\overline{OE}$
B	1B2	1B1	GND	GND	1A1	1A2
C	1B4	1B3	V_{CCB}	V_{CCA}	1A3	1A4
D	1B6	1B5	GND	GND	1A5	1A6
E	1B8	1B7	—	—	1A7	1A8
F	2B1	2B2	—	—	2A2	2A1
G	2B3	2B4	GND	GND	2A4	2A3
H	2B5	2B6	V_{CCB}	V_{CCA}	2A6	2A5
J	2B7	2B8	GND	GND	2A8	2A7
K	2DIR	NC	NC	NC	NC	$2\overline{OE}$

(1) NC – No internal connection

Copyright © 1994–2016, Texas Instruments Incorporated

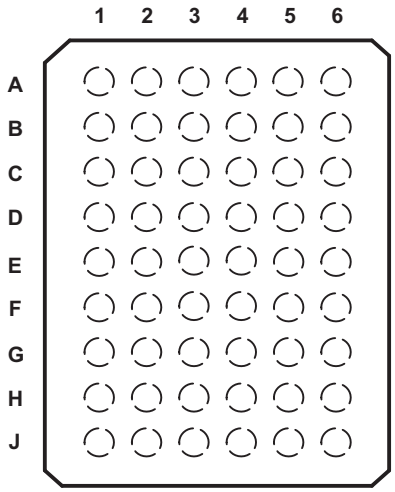

Table 2. Pin Assignments(1)
(54-Ball GRD or ZRD Package)

	1	2	3	4	5	6
A	1B1	NC	1DIR	$1\overline{OE}$	NC	1A1
B	1B3	1B2	NC	NC	1A2	1A3
C	1B5	1B4	V_{CCB}	V_{CCA}	1A4	1A5
D	1B7	1B6	GND	GND	1A6	1A7
E	2B1	1B8	GND	GND	1A8	2A1
F	2B3	2B2	GND	GND	2A2	2A3
G	2B5	2B4	V_{CCB}	V_{CCA}	2A4	2A5
H	2B7	2B6	NC	NC	2A6	2A7
J	2B8	NC	2DIR	$2\overline{OE}$	NC	2A8

(1) NC – No internal connection

Copyright © 1994–2016, Texas Instruments Incorporated

6 Specifications

6.1 Absolute Maximum Ratings

over operating free-air temperature range for V_{CCB} at 5 V and V_{CCA} at 3.3 V (unless otherwise noted)(1)

			MIN	MAX	UNIT
V_{CC}	Supply voltage	V_{CCA}	–0.5	4.6	V
		V_{CCB}	–0.5	6	
V_I	Input voltage	Except I/O ports(2)	–0.5	6	V
		I/O port A(3)	–0.5	V_{CCA} + 0.5	
		I/O port B(2)	–0.5	V_{CCB} + 0.5	
I_{IK}	Input clamp current	V_I < 0		–50	mA
I_{OK}	Output clamp current	V_O < 0		–50	mA
I_O	Continuous output current			±50	mA
	Continuous current through each V_{CC} or GND			±100	mA
T_{stg}	Storage temperature		–65	150	°C

(1) Stresses beyond those listed under *Absolute Maximum Ratings* may cause permanent damage to the device. These are stress ratings only, which do not imply functional operation of the device at these or any other conditions beyond those indicated under *Recommended Operating Conditions*. Exposure to absolute-maximum-rated conditions for extended periods may affect device reliability.
(2) This value is limited to 6 V maximum.
(3) This value is limited to 4.6 V maximum.

6.2 ESD Ratings

			VALUE	UNIT
$V_{(ESD)}$	Electrostatic discharge	Human-body model (HBM), per ANSI/ESDA/JEDEC JS-001(1)	±2000	V
		Charged-device model (CDM), per JEDEC specification JESD22-C101(2)	±1000	

(1) JEDEC document JEP155 states that 500-V HBM allows safe manufacturing with a standard ESD control process.
(2) JEDEC document JEP157 states that 250-V CDM allows safe manufacturing with a standard ESD control process.

6.3 Recommended Operating Conditions: V_{CCB} at 3.3 V

for V_{CCB} at 3.3 V and 5 V(1)

			MIN	MAX	UNIT
V_{CCB}	Supply voltage		3	5.5	V
V_{IH}	High-level input voltage		2		V
V_{IL}	Low-level input voltage	V_{CCB} = 3 V to 3.6 V		0.7	V
		V_{CCB} = 4.5 V to 5.5 V		0.8	
V_{IB}	Input voltage		0	V_{CCB}	V
V_{OB}	Output voltage		0	V_{CCB}	V
I_{OH}	High-level output current			–24	mA
I_{OL}	Low-level output current			24	mA
$\Delta t/\Delta v$	Input transition rise or fall rate			10	ns/V
T_A	Operating free-air temperature		–40	85	°C

(1) All unused inputs of the device must be held at V_{CC} or GND to ensure proper device operation. see the TI application report, *Implications of Slow or Floating CMOS Inputs* (SCBA004).

Copyright © 1994–2016, Texas Instruments Incorporated

6.4 Recommended Operating Conditions: V_{CCA} at 2.5 V

for V_{CCA} at 2.5 V and 3.3 V(1)

			MIN	MAX	UNIT
V_{CCA}	Supply voltage		2.3	3.6	V
V_{IH}	High-level input voltage	V_{CCA} = 2.3 V to 2.7 V	1.7		V
		V_{CCA} = 3 V to 3.6 V	2		
V_{IL}	Low-level input voltage	V_{CCA} = 2.3 V to 2.7 V		0.7	V
		V_{CCA} = 3 V to 3.6 V		0.8	
V_{IA}	Input voltage		0	V_{CCA}	V
V_{OA}	Output voltage		0	V_{CCA}	V
I_{OH}	High-level output current	V_{CCA} = 2.3 V		–18	mA
		V_{CCA} = 3 V		–24	
I_{OL}	Low-level output current	V_{CCA} = 2.3 V		18	mA
		V_{CCA} = 3 V		24	
$\Delta t/\Delta v$	Input transition rise or fall rate			10	ns/V
T_A	Operating free-air temperature		–40	85	°C

(1) All unused inputs of the device must be held at V_{CC} or GND to ensure proper device operation. See the TI application report, *Implications of Slow or Floating CMOS Inputs*, (SCBA004).

6.5 Thermal Information

THERMAL METRIC(1)		SN74ALVC164245				UNIT
		DGG (TSSOP)	DL (SSOP)	ZQL (BGA MICROSTAR JUNIOR)	ZRD (BGA MICROSTAR JUNIOR)	
		48 PINS	48 PINS	56 PINS	54 PINS	
$R_{\theta JA}$	Junction-to-ambient thermal resistance	60.7	63.6	54.5	50.7	°C/W
$R_{\theta JC(top)}$	Junction-to-case (top) thermal resistance	14.3	30.1	19.1	17.9	°C/W
$R_{\theta JB}$	Junction-to-board thermal resistance	27.7	36.2	21.7	20.2	°C/W
ψ_{JT}	Junction-to-top characterization parameter	0.5	8.1	0.5	0.5	°C/W
ψ_{JB}	Junction-to-board characterization parameter	27.6	35.6	21.7	19.9	°C/W

(1) For more information about traditional and new thermal metrics, see the *Semiconductor and IC Package Thermal Metrics* application report.

Copyright © 1994–2016, Texas Instruments Incorporated

6.6 Electrical Characteristics: V_{CCA} = 2.7 V to 3.6 V

over recommended operating free-air temperature range for V_{CCA} = 2.7 V to 3.6 V and V_{CCB} = 4.5 V to 5.5 V (unless otherwise noted)

PARAMETER		TEST CONDITIONS	V_{CCA}	V_{CCB}	MIN	TYP(1)	MAX	UNIT
V_{OH}	B to A	I_{OH} = –100 µA	2.7 V to 3.6 V		V_{CC} – 0.2			V
		I_{OH} = –12 mA	2.7 V		2.2			
			3 V		2.4			
		I_{OH} = –24 mA	3 V		2			
	A to B	I_{OH} = –100 µA		4.5 V	4.3			
				5.5 V	5.3			
		I_{OH} = –24 mA		4.5 V	3.7			
				5.5 V	4.7			
V_{OL}	B to A	I_{OL} = 100 µA	2.7 V to 3.6 V				0.2	V
		I_{OL} = 12 mA	2.7 V				0.4	
		I_{OL} = 24 mA	3 V				0.55	
	A to B	I_{OL} = 100 µA		4.5 V to 5.5 V			0.2	
		I_{OL} = 24 mA		4.5 V to 5.5 V			0.55	
I_I	Control inputs	$V_I = V_{CCA}/V_{CCB}$ or GND	3.6 V	5.5 V			±5	µA
I_{OZ}(2)	A or B port	$V_O = V_{CCA}/V_{CCB}$ or GND	3.6 V	5.5 V			±10	µA
I_{CC}		$V_I = V_{CCA}/V_{CCB}$ or GND, I_O = 0	3.6 V	5.5 V			40	µA
ΔI_{CC}(3)		One input at V_{CCA}/V_{CCB} – 0.6 V, Other inputs at V_{CCA}/V_{CCB} or GND	3 V to 3.6 V	4.5 V to 5.5 V			750	µA
C_i	Control inputs	$V_I = V_{CCA}/V_{CCB}$ or GND	3.3 V	5 V		6.5		pF
C_{io}	A or B port	$V_O = V_{CCA}/V_{CCB}$ or GND	3.3 V	3.3 V		8.5		pF

(1) Typical values are measured at V_{CCA} = 3.3 V and V_{CCB} = 5 V, T_A = 25°C.
(2) For I/O ports, the parameter I_{OZ} includes the input leakage current.
(3) This is the supply current increase for each input that is at one of the specified TTL voltage levels, rather than at 0 or the associated V_{CC}.

Copyright © 1994–2016, Texas Instruments Incorporated

6.7 Electrical Characteristics: V_{CCA} = 2.3 V to 2.7 V

over recommended operating free-air temperature range for V_{CCA} = 2.3 V to 2.7 V and V_{CCB} = 3 V to 3.6 V (unless otherwise noted)

PARAMETER		TEST CONDITIONS	V_{CCA}	V_{CCB}	MIN	MAX	UNIT
V_{OH}	B to A	I_{OH} = –100 µA	2.3 V to 2.7 V	3 V to 3.6 V	V_{CCA} – 0.2		V
		I_{OH} = –8 mA	2.3 V	3 V to 3.6 V	1.7		
		I_{OH} = –12 mA	2.7 V	3 V to 3.6 V	1.8		
	A to B	I_{OH} = –100 µA	2.3 V to 2.7 V	3 V to 3.6 V	V_{CCB} – 0.2		
		I_{OH} = –18 mA	2.3 V to 2.7 V	3 V	2.2		
V_{OL}	B to A	I_{OL} = 100 µA	2.3 V to 2.7 V	3 V to 3.6 V		0.2	V
		I_{OL} = 12 mA	2.3 V	3 V to 3.6 V		0.6	
	A to B	I_{OL} = 100 µA	2.3 V to 2.7 V	3 V to 3.6 V		0.2	
		I_{OL} = 18 mA	2.3 V	3 V		0.55	
I_I	Control inputs	V_I = V_{CCA}/V_{CCB} or GND	2.3 V to 2.7 V	3 V to 3.6 V		±5	µA
I_{OZ} (1)	A or B port	V_O = V_{CCA}/V_{CCB} or GND	2.3 V to 2.7 V	3 V to 3.6 V		±10	µA
I_{CC}		V_I = V_{CCA}/V_{CCB} or GND, I_O = 0	2.3 V to 2.7 V	3 V to 3.6 V		20	µA
ΔI_{CC} (2)		One input at V_{CCA}/V_{CCB} – 0.6 V, Other inputs at V_{CCA}/V_{CCB} or GND	2.3 V to 2.7 V	3 V to 3.6 V		750	µA

(1) For I/O ports, the parameter I_{OZ} includes the input leakage current.
(2) This is the increase in supply current for each input that is at one of the specified TTL voltage levels, rather than at 0 or the associated V_{CC}.

6.8 Switching Characteristics

over recommended operating free-air temperature range (unless otherwise noted) (see Figure 2 through Figure 5)

PARAMETER	FROM (INPUT)	TO (OUTPUT)	V_{CCB} = 3.3 V ± 0.3 V		V_{CCB} = 5 V ± 0.5 V				UNIT
			V_{CCA} = 2.5 V ± 0.2 V		V_{CCA} = 2.7 V		V_{CCA} = 3.3 V ± 0.3 V		
			MIN	MAX	MIN	MAX	MIN	MAX	
t_{pd}	A	B	7.6		5.9		1	5.8	ns
	B	A	7.6		6.7		1.2	5.8	
t_{en}	$\overline{OE}$	B	11.5		9.3		1	8.9	ns
t_{dis}	$\overline{OE}$	B	10.5		9.2		2.1	9.5	ns
t_{en}	$\overline{OE}$	A	12.3		10.2		2	9.1	ns
t_{dis}	$\overline{OE}$	A	9.3		9		2.9	8.6	ns

6.9 Operating Characteristics

T_A = 25°C

PARAMETER			TEST CONDITIONS	V_{CCB} = 3.3 V	V_{CCB} = 5 V	UNIT
				V_{CCA} = 2.5 V	V_{CCA} = 3.3 V	
				TYP	TYP	
C_{pd}	Power dissipation capacitance	Outputs enabled (B)	C_L = 50 pF, f = 10 MHz	55	56	pF
		Outputs disabled (B)		27	6	
		Outputs enabled (A)	C_L = 50 pF, f = 10 MHz	118	56	
		Outputs disabled (A)		58	6	

Copyright © 1994–2016, Texas Instruments Incorporated

6.10 Typical Characteristics

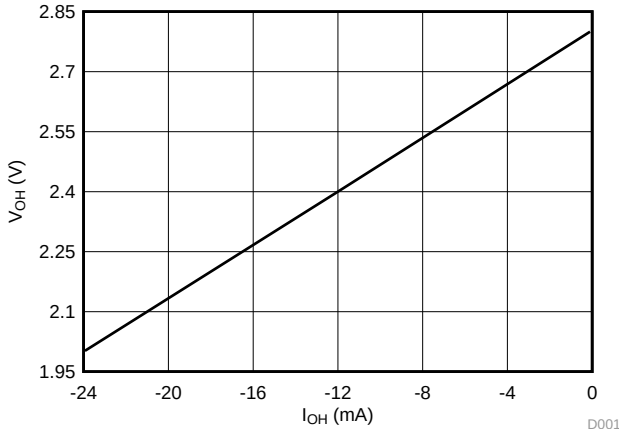

Figure 1. V_{OH} vs I_{OH}

7 Parameter Measurement Information

7.1 V_{CCA} = 2.5 V ± 0.2 V to V_{CCB} = 3.3 V ± 0.3 V

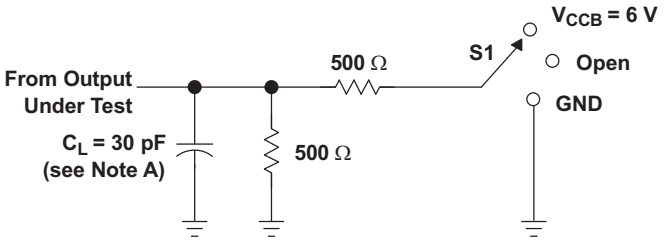

TEST	S1
t_{pd} t_{PLZ}/t_{PZL} t_{PHZ}/t_{PZH}	Open V_{CCB} = 6 V GND

LOAD CIRCUIT

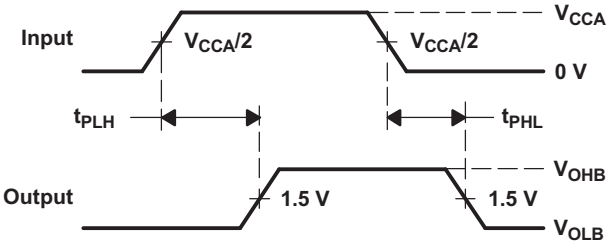

VOLTAGE WAVEFORMS
PROPAGATION DELAY TIMES

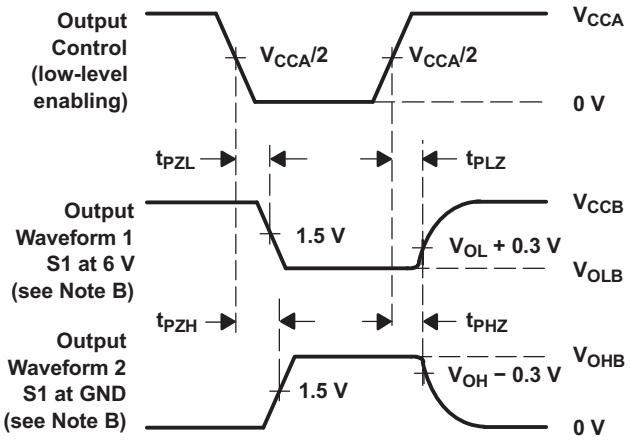

VOLTAGE WAVEFORMS
ENABLE AND DISABLE TIMES

NOTES: A. C_L includes probe and jig capacitance.
B. Waveform 1 is for an output with internal conditions such that the output is low, except when disabled by the output control. Waveform 2 is for an output with internal conditions such that the output is high, except when disabled by the output control.
C. All input pulses are supplied by generators having the following characteristics: PRR≤10 MHz, Z_O = 50 Ω, t_r≤2 ns, t_f≤2 ns.
D. The outputs are measured one at a time, with one transition per measurement.
E. t_{PLZ} and t_{PHZ} are the same as t_{dis}.
F. t_{PZL} and t_{PZH} are the same as t_{en}.
G. t_{PLH} and t_{PHL} are the same as t_{pd}.

Figure 2. Load Circuit and Voltage Waveforms

Copyright © 1994–2016, Texas Instruments Incorporated

7.2 V_{CCB} = 3.3 V ± 0.3 V to V_{CCA} = 2.5 V ± 0.2 V

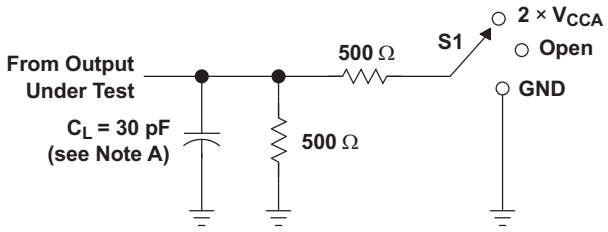

TEST	S1
t_{pd} t_{PLZ}/t_{PZL} t_{PHZ}/t_{PZH}	Open 2 × V_{CCA} GND

LOAD CIRCUIT

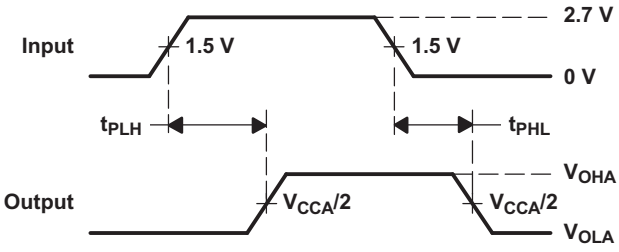

VOLTAGE WAVEFORMS
PROPAGATION DELAY TIMES

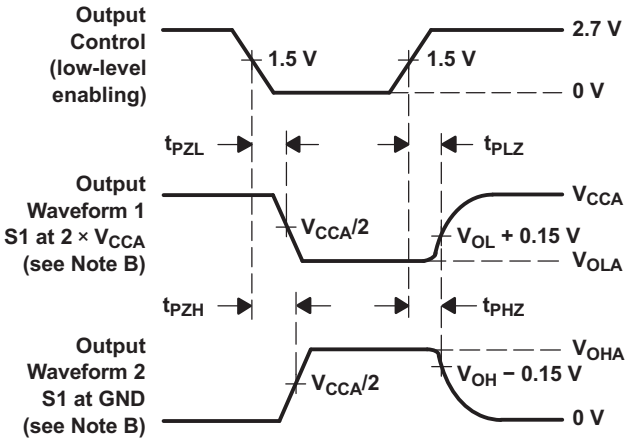

VOLTAGE WAVEFORMS
ENABLE AND DISABLE TIMES

NOTES: A. C_L includes probe and jig capacitance.
B. Waveform 1 is for an output with internal conditions such that the output is low, except when disabled by the output control. Waveform 2 is for an output with internal conditions such that the output is high, except when disabled by the output control.
C. All input pulses are supplied by generators having the following characteristics: PRR≤10 MHz, Z_O = 50 Ω, t_r≤2 ns, t_f≤2 ns.
D. The outputs are measured one at a time, with one transition per measurement.
E. t_{PLZ} and t_{PHZ} are the same as t_{dis}.
F. t_{PZL} and t_{PZH} are the same as t_{en}.
G. t_{PLH} and t_{PHL} are the same as t_{pd}.

Figure 3. Load Circuit and Voltage Waveforms

7.3 V_{CCA} = 3.3 V ± 0.3 V to V_{CCB} = 5 V ± 0.5 V

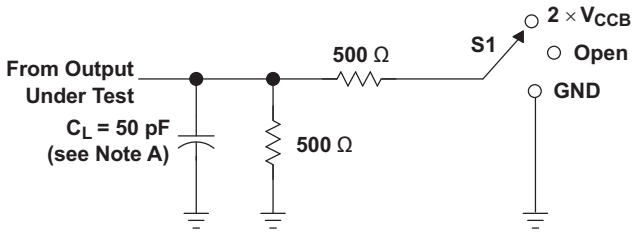

LOAD CIRCUIT

TEST	S1
t_{pd}	Open
t_{PLZ}/t_{PZL}	2 × V_{CCB}
t_{PHZ}/t_{PZH}	GND

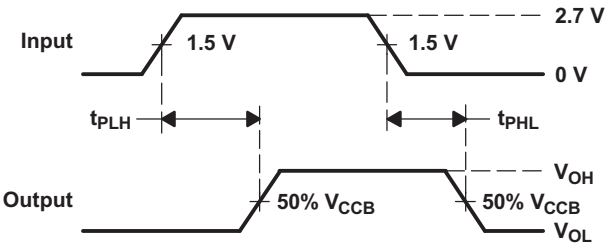

VOLTAGE WAVEFORMS
PROPAGATION DELAY TIMES

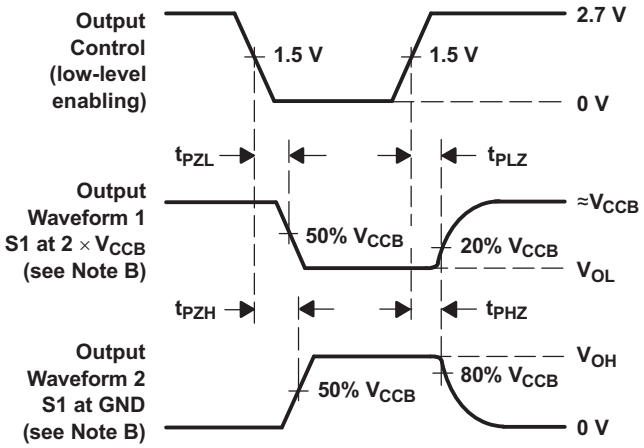

VOLTAGE WAVEFORMS
ENABLE AND DISABLE TIMES

NOTES: A. C_L includes probe and jig capacitance.
B. Waveform 1 is for an output with internal conditions such that the output is low except when disabled by the output control. Waveform 2 is for an output with internal conditions such that the output is high, except when disabled by the output control.
C. All input pulses are supplied by generators having the following characteristics: PRR ≤ 10 MHz, Z_O = 50 Ω, t_r ≤ 2.5 ns, t_f ≤ 2.5 ns.
D. The outputs are measured one at a time, with one transition per measurement.
E. t_{PLZ} and t_{PHZ} are the same as t_{dis}.
F. t_{PZL} and t_{PZH} are the same as t_{en}.
G. t_{PLH} and t_{PHL} are the same as t_{pd}.

Figure 4. Load Circuit and Voltage Waveforms

Copyright © 1994–2016, Texas Instruments Incorporated

7.4 V_{CCB} = 5 V ± 0.5 V to V_{CCA} = 2.7 V and 3.3 V ± 0.3 V

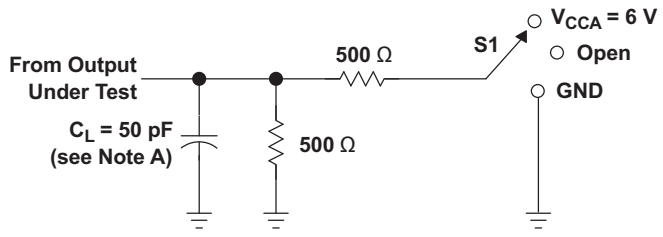

LOAD CIRCUIT

TEST	S1
t_{pd} t_{PLZ}/t_{PZL} t_{PHZ}/t_{PZH}	Open V_{CCA} = 6 V GND

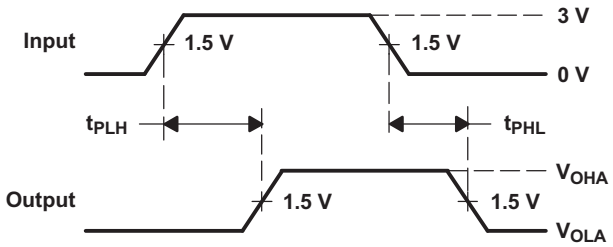

VOLTAGE WAVEFORMS
PROPAGATION DELAY TIMES

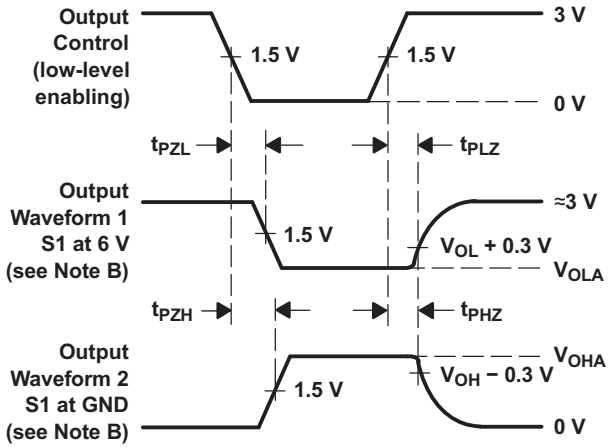

VOLTAGE WAVEFORMS
ENABLE AND DISABLE TIMES

NOTES: A. C_L includes probe and jig capacitance.
B. Waveform 1 is for an output with internal conditions such that the output is low except when disabled by the output control. Waveform 2 is for an output with internal conditions such that the output is high, except when disabled by the output control.
C. All input pulses are supplied by generators having the following characteristics: PRR≤ 10 MHz, Z_O = 50 Ω, t_r ≤ 2.5 ns, t_f ≤ 2.5 ns.
D. The outputs are measured one at a time, with one transition per measurement.
E. t_{PLZ} and t_{PHZ} are the same as t_{dis}.
F. t_{PZL} and t_{PZH} are the same as t_{en}.
G. t_{PLH} and t_{PHL} are the same as t_{pd}.

Figure 5. Load Circuit and Voltage Waveforms

Copyright © 1994–2016, Texas Instruments Incorporated

8 Detailed Description

8.1 Overview

The SN74ALVC16245 device is designed for asynchronous communication between data buses. The control-function implementation minimizes external timing requirements.

This device can be used as two 8-bit transceivers or one 16-bit transceiver. It allows data transmission from the A bus to the B bus or from the B bus to the A bus, depending on the logic level at the direction-control (DIR) input. The output-enable ($\overline{OE}$) input can be used to disable the device so that the buses are effectively isolated. To ensure the high-impedance state during power up or power down, $\overline{OE}$ should be tied to V_{CC} through a pullup resistor; the minimum value of the resistor is determined by the current-sinking capability of the driver.

Inputs can be driven from either 3.3-V or 5-V devices. This feature allows the use of this device as a translator in a mixed 3.3-V and 5-V system environment.

8.2 Functional Block Diagram

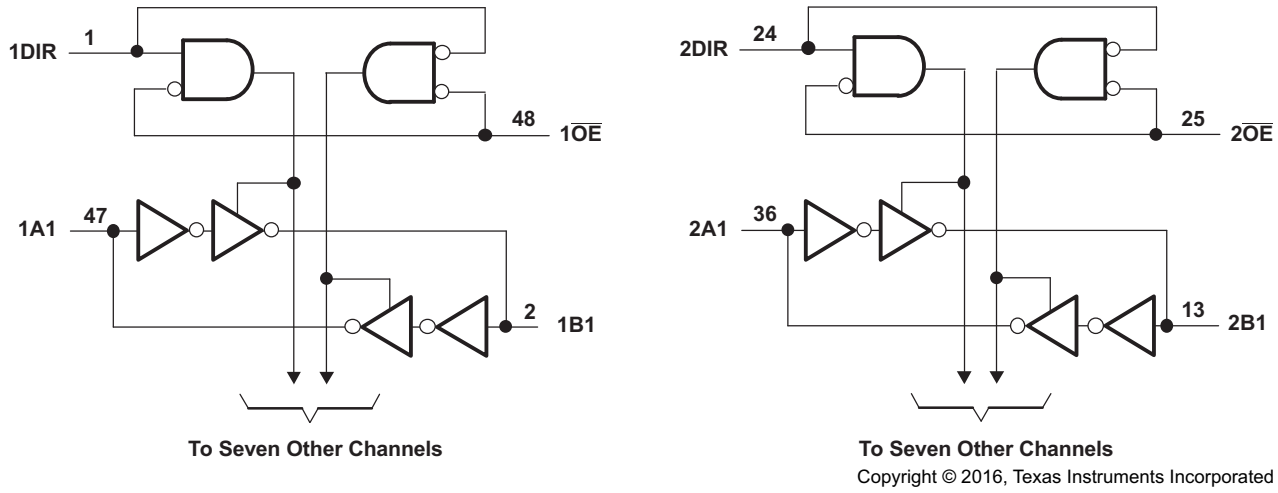

Copyright © 2016, Texas Instruments Incorporated

Figure 6. Logic Diagram (Positive Logic)

8.3 Feature Description

The SN74ALVC164245 can output 24 mA drive at 3.3V V_{CC}. This device allows down voltage translations and accepts input voltages to V_{CC} + 0.5V. This device is useful for high-speed applications because of the low t_{pd}.

8.4 Device Functional Modes

Table 3 lists the functions of the device.

Table 3. Function Table(1) (Each 8-Bit Section)

CONTROL INPUTS		OUTPUT CIRCUITS		OPERATION
$\overline{OE}$	DIR	A PORT	B PORT	
L	L	Enabled	Hi-Z	B data to A bus
L	H	Hi-Z	Enabled	A data to B bus
H	X	Hi-Z	Hi-Z	Isolation

(1) Input circuits of the data I/Os always are active.

Copyright © 1994–2016, Texas Instruments Incorporated

9 Application and Implementation

NOTE

Information in the following applications sections is not part of the TI component specification, and TI does not warrant its accuracy or completeness. TI's customers are responsible for determining suitability of components for their purposes. Customers should validate and test their design implementation to confirm system functionality.

9.1 Application Information

The SN74ALVC16245 device is a 16-bit bidirectional transceiver. This device can be used as two 8-bit transceivers or one 16-bit transceiver. It allows data transmission from the A bus to the B bus or from the B bus to the A bus, depending on the logic level at the direction-control (DIR) input. The output-enable ($\overline{OE}$) input can be used to disable the device so that the buses are effectively isolated. This allows it to be used in multi-power systems and for down translation as well.

9.2 Typical Application

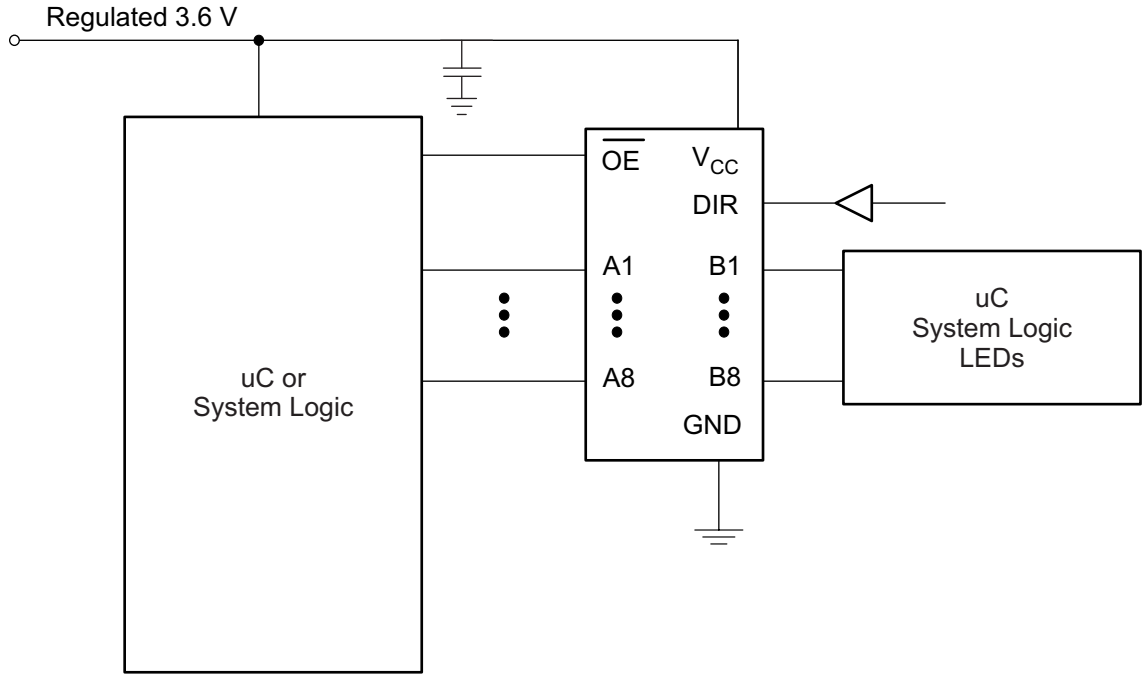

Figure 7. Typical Application Schematic

9.2.1 Design Requirements

This device uses CMOS technology and has balanced output drive. Take care to avoid bus contention because it can drive currents that would exceed maximum limits. The high drive also creates fast edges into light loads; therefore, routing and load conditions must be considered to prevent ringing.

9.2.2 Detailed Design Procedure

1. Recommended Input Conditions
   - Rise time and fall time specs: See ($\Delta t/\Delta V$) in *Recommended Operating Conditions: V_{CCB} at 3.3 V*.
   - Specified high and low levels: See (V_{IH} and V_{IL}) in *Recommended Operating Conditions: V_{CCB} at 3.3 V*.
2. Recommend Output Conditions
   - Load currents should not exceed 50 mA per output and 100 mA total for the part.
   - Outputs should not be pulled above V_{CC}.

Copyright © 1994–2016, Texas Instruments Incorporated

Typical Application (continued)

9.2.3 Application Curve

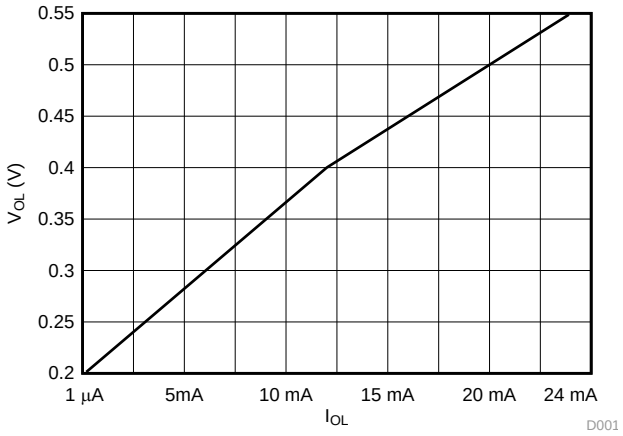

Figure 8. V_{OH} vs I_{OH}

Copyright © 1994–2016, Texas Instruments Incorporated

10 Power Supply Recommendations

TI level-translation devices offer an opportunity for successful mixed-voltage signal design. A proper power-up sequence must always be followed to avoid excessive supply current, bus contention, oscillations, or other anomalies caused by improperly biased device pins. Take these precautions to guard against such power-up problems:

1. Connect ground before any supply voltage is applied.
2. Power up the control side of the device (V_{CCA} for all four of these devices).
3. Tie $\overline{OE}$ to V_{CCA} with a pullup resistor so that it ramps with V_{CCA}.
4. Depending on the direction of the data path, DIR can be high or low. If DIR high is needed (A data to B bus), ramp it with V_{CCA}. Otherwise, keep DIR low.

For more information, see the TI application report, *Texas Instruments Voltage-Level-Translation Devices* (SCEA021).

11 Layout

11.1 Layout Guidelines

When using multiple bit logic devices, inputs should not float. In many cases, functions or parts of functions of digital logic devices are unused. Some examples are when only two inputs of a triple-input AND gate are used, or when only 3 of the 4-buffer gates are used. Such input pins should not be left unconnected because the undefined voltages at the outside connections result in undefined operational states.

Specified in the Figure 9 are rules that must be observed under all circumstances. All unused inputs of digital logic devices must be connected to a high or low bias to prevent them from floating. The logic level that should be applied to any particular unused input depends on the function of the device. Generally they will be tied to GND or V_{CC}, whichever makes more sense or is more convenient. It is acceptable to float outputs unless the part is a transceiver. If the transceiver has an output enable pin, it will disable the outputs section of the part when asserted. This will not disable the input section of the I/Os so they also cannot float when disabled.

11.2 Layout Example

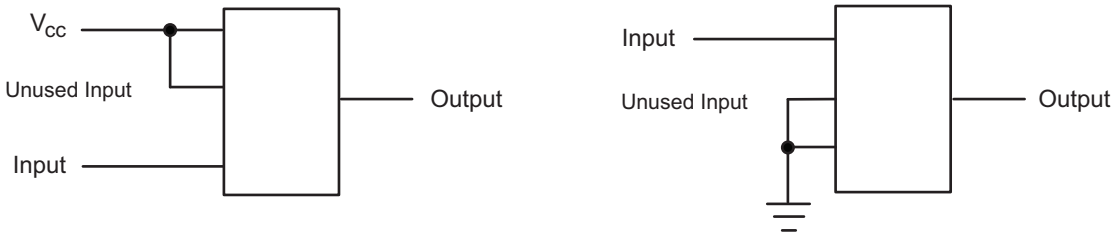

Figure 9. Layout Diagram

12 Device and Documentation Support

12.1 Documentation Support

12.1.1 Related Documentation

For related documentation see the following:

- *Texas Instruments Voltage-Level-Translation Devices* (SCEA021)
- *Implications of Slow or Floating CMOS Inputs* (SCBA004)

12.2 Receiving Notification of Documentation Updates

To receive notification of documentation updates, navigate to the device product folder on ti.com. In the upper right corner, click on *Alert me* to register and receive a weekly digest of any product information that has changed. For change details, review the revision history included in any revised document.

12.3 Community Resource

The following links connect to TI community resources. Linked contents are provided "AS IS" by the respective contributors. They do not constitute TI specifications and do not necessarily reflect TI's views; see TI's Terms of Use.

TI E2E™ Online Community ***TI's Engineer-to-Engineer (E2E) Community.*** Created to foster collaboration among engineers. At e2e.ti.com, you can ask questions, share knowledge, explore ideas and help solve problems with fellow engineers.

Design Support ***TI's Design Support*** Quickly find helpful E2E forums along with design support tools and contact information for technical support.

12.4 Trademarks

Widebus, E2E are trademarks of Texas Instruments.
All other trademarks are the property of their respective owners.

12.5 Electrostatic Discharge Caution



These devices have limited built-in ESD protection. The leads should be shorted together or the device placed in conductive foam during storage or handling to prevent electrostatic damage to the MOS gates.

12.6 Glossary

SLYZ022 — *TI Glossary*.

This glossary lists and explains terms, acronyms, and definitions.

13 Mechanical, Packaging, and Orderable Information

The following pages include mechanical, packaging, and orderable information. This information is the most current data available for the designated devices. This data is subject to change without notice and revision of this document. For browser-based versions of this data sheet, refer to the left-hand navigation.

Copyright © 1994–2016, Texas Instruments Incorporated

PACKAGING INFORMATION

Orderable Device	Status (1)	Package Type	Package Drawing	Pins	Package Qty	Eco Plan (2)	Lead/Ball Finish (6)	MSL Peak Temp (3)	Op Temp (°C)	Device Marking (4/5)	Samples
74ALVC164245DGGRE4	ACTIVE	TSSOP	DGG	48	2000	Green (RoHS & no Sb/Br)	CU NIPDAU	Level-1-260C-UNLIM	-40 to 85	ALVC164245	Samples
74ALVC164245DGGRG4	ACTIVE	TSSOP	DGG	48	2000	Green (RoHS & no Sb/Br)	CU NIPDAU	Level-1-260C-UNLIM	-40 to 85	ALVC164245	Samples
74ALVC164245DGGTE4	ACTIVE	TSSOP	DGG	48	250	Green (RoHS & no Sb/Br)	CU NIPDAU	Level-1-260C-UNLIM	-40 to 85	ALVC164245	Samples
74ALVC164245DGGTG4	ACTIVE	TSSOP	DGG	48	250	Green (RoHS & no Sb/Br)	CU NIPDAU	Level-1-260C-UNLIM	-40 to 85	ALVC164245	Samples
74ALVC164245DLG4	ACTIVE	SSOP	DL	48	25	Green (RoHS & no Sb/Br)	CU NIPDAU	Level-1-260C-UNLIM	-40 to 85	ALVC164245	Samples
74ALVC164245DLRG4	ACTIVE	SSOP	DL	48	1000	Green (RoHS & no Sb/Br)	CU NIPDAU	Level-1-260C-UNLIM	-40 to 85	ALVC164245	Samples
74ALVC164245GRDR	OBSOLETE	BGA MICROSTAR JUNIOR	GRD	54		TBD	Call TI	Call TI	-40 to 85		
74ALVC164245ZQLR	ACTIVE	BGA MICROSTAR JUNIOR	ZQL	56	1000	Green (RoHS & no Sb/Br)	SNAGCU	Level-1-260C-UNLIM	-40 to 85	VC4245	Samples
74ALVC164245ZRDR	ACTIVE	BGA MICROSTAR JUNIOR	ZRD	54	1000	Green (RoHS & no Sb/Br)	SNAGCU	Level-1-260C-UNLIM	-40 to 85	VC4245	Samples
SN74ALVC164245-W	ACTIVE	WAFERSALE	YS	0		TBD	Call TI	Call TI			Samples
SN74ALVC164245DGGR	ACTIVE	TSSOP	DGG	48	2000	Green (RoHS & no Sb/Br)	CU NIPDAU	Level-1-260C-UNLIM	-40 to 85	ALVC164245	Samples
SN74ALVC164245DGGT	ACTIVE	TSSOP	DGG	48	250	Green (RoHS & no Sb/Br)	CU NIPDAU	Level-1-260C-UNLIM	-40 to 85	ALVC164245	Samples
SN74ALVC164245DL	ACTIVE	SSOP	DL	48	25	Green (RoHS & no Sb/Br)	CU NIPDAU	Level-1-260C-UNLIM	-40 to 85	ALVC164245	Samples
SN74ALVC164245DLR	ACTIVE	SSOP	DL	48	1000	Green (RoHS & no Sb/Br)	CU NIPDAU	Level-1-260C-UNLIM	-40 to 85	ALVC164245	Samples
SN74ALVC164245KR	OBSOLETE	BGA MICROSTAR JUNIOR	GQL	56		TBD	Call TI	Call TI	-40 to 85		

(1) The marketing status values are defined as follows:
ACTIVE: Product device recommended for new designs.
LIFEBUY: TI has announced that the device will be discontinued, and a lifetime-buy period is in effect.
NRND: Not recommended for new designs. Device is in production to support existing customers, but TI does not recommend using this part in a new design.
PREVIEW: Device has been announced but is not in production. Samples may or may not be available.
OBSOLETE: TI has discontinued the production of the device.

(2) Eco Plan - The planned eco-friendly classification: Pb-Free (RoHS), Pb-Free (RoHS Exempt), or Green (RoHS & no Sb/Br) - please check http://www.ti.com/productcontent for the latest availability information and additional product content details.
TBD: The Pb-Free/Green conversion plan has not been defined.
Pb-Free (RoHS): TI's terms "Lead-Free" or "Pb-Free" mean semiconductor products that are compatible with the current RoHS requirements for all 6 substances, including the requirement that lead not exceed 0.1% by weight in homogeneous materials. Where designed to be soldered at high temperatures, TI Pb-Free products are suitable for use in specified lead-free processes.
Pb-Free (RoHS Exempt): This component has a RoHS exemption for either 1) lead-based flip-chip solder bumps used between the die and package, or 2) lead-based die adhesive used between the die and leadframe. The component is otherwise considered Pb-Free (RoHS compatible) as defined above.
Green (RoHS & no Sb/Br): TI defines "Green" to mean Pb-Free (RoHS compatible), and free of Bromine (Br) and Antimony (Sb) based flame retardants (Br or Sb do not exceed 0.1% by weight in homogeneous material)

(3) MSL, Peak Temp. - The Moisture Sensitivity Level rating according to the JEDEC industry standard classifications, and peak solder temperature.

(4) There may be additional marking, which relates to the logo, the lot trace code information, or the environmental category on the device.

(5) Multiple Device Markings will be inside parentheses. Only one Device Marking contained in parentheses and separated by a "~" will appear on a device. If a line is indented then it is a continuation of the previous line and the two combined represent the entire Device Marking for that device.

(6) Lead/Ball Finish - Orderable Devices may have multiple material finish options. Finish options are separated by a vertical ruled line. Lead/Ball Finish values may wrap to two lines if the finish value exceeds the maximum column width.

Important Information and Disclaimer: The information provided on this page represents TI's knowledge and belief as of the date that it is provided. TI bases its knowledge and belief on information provided by third parties, and makes no representation or warranty as to the accuracy of such information. Efforts are underway to better integrate information from third parties. TI has taken and continues to take reasonable steps to provide representative and accurate information but may not have conducted destructive testing or chemical analysis on incoming materials and chemicals. TI and TI suppliers consider certain information to be proprietary, and thus CAS numbers and other limited information may not be available for release.

In no event shall TI's liability arising out of such information exceed the total purchase price of the TI part(s) at issue in this document sold by TI to Customer on an annual basis.

OTHER QUALIFIED VERSIONS OF SN74ALVC164245 :

- Enhanced Product: SN74ALVC164245-EP

NOTE: Qualified Version Definitions:

- Enhanced Product - Supports Defense, Aerospace and Medical Applications

TAPE AND REEL INFORMATION

REEL DIMENSIONS

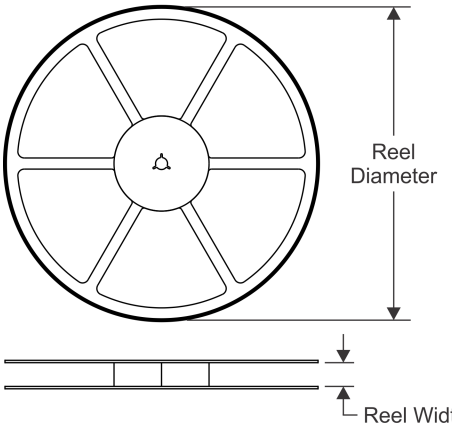

TAPE DIMENSIONS

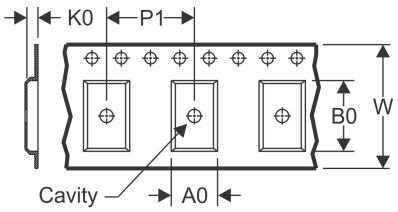

A0	Dimension designed to accommodate the component width
B0	Dimension designed to accommodate the component length
K0	Dimension designed to accommodate the component thickness
W	Overall width of the carrier tape
P1	Pitch between successive cavity centers

QUADRANT ASSIGNMENTS FOR PIN 1 ORIENTATION IN TAPE

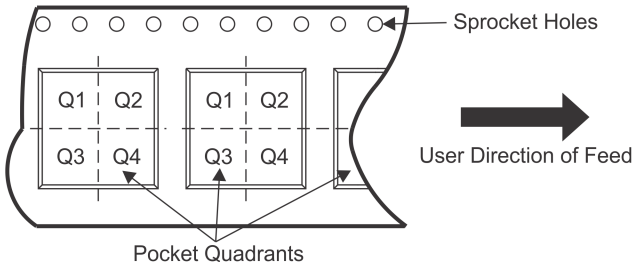

*All dimensions are nominal

Device	Package Type	Package Drawing	Pins	SPQ	Reel Diameter (mm)	Reel Width W1 (mm)	A0 (mm)	B0 (mm)	K0 (mm)	P1 (mm)	W (mm)	Pin1 Quadrant
74ALVC164245ZQLR	BGA MICROSTAR JUNIOR	ZQL	56	1000	330.0	16.4	4.8	7.3	1.5	8.0	16.0	Q1
74ALVC164245ZRDR	BGA MICROSTAR JUNIOR	ZRD	54	1000	330.0	16.4	5.8	8.3	1.55	8.0	16.0	Q1
SN74ALVC164245DGGR	TSSOP	DGG	48	2000	330.0	24.4	8.6	15.8	1.8	12.0	24.0	Q1
SN74ALVC164245DLR	SSOP	DL	48	1000	330.0	32.4	11.35	16.2	3.1	16.0	32.0	Q1

TAPE AND REEL BOX DIMENSIONS

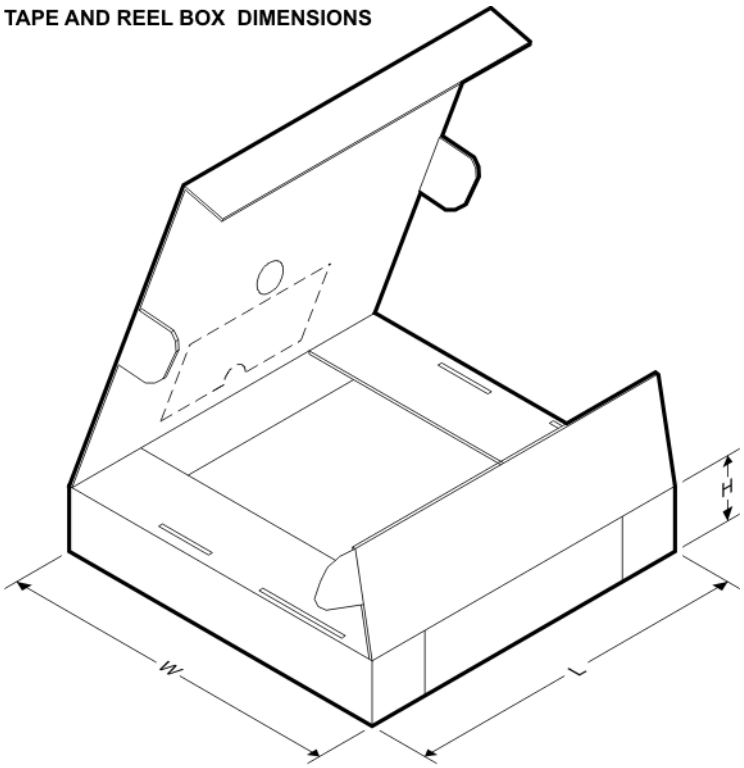

*All dimensions are nominal

Device	Package Type	Package Drawing	Pins	SPQ	Length (mm)	Width (mm)	Height (mm)
74ALVC164245ZQLR	BGA MICROSTAR JUNIOR	ZQL	56	1000	336.6	336.6	28.6
74ALVC164245ZRDR	BGA MICROSTAR JUNIOR	ZRD	54	1000	336.6	336.6	28.6
SN74ALVC164245DGGR	TSSOP	DGG	48	2000	367.0	367.0	45.0
SN74ALVC164245DLR	SSOP	DL	48	1000	367.0	367.0	55.0

DGG (R-PDSO-G)** **PLASTIC SMALL-OUTLINE PACKAGE**

48 PINS SHOWN

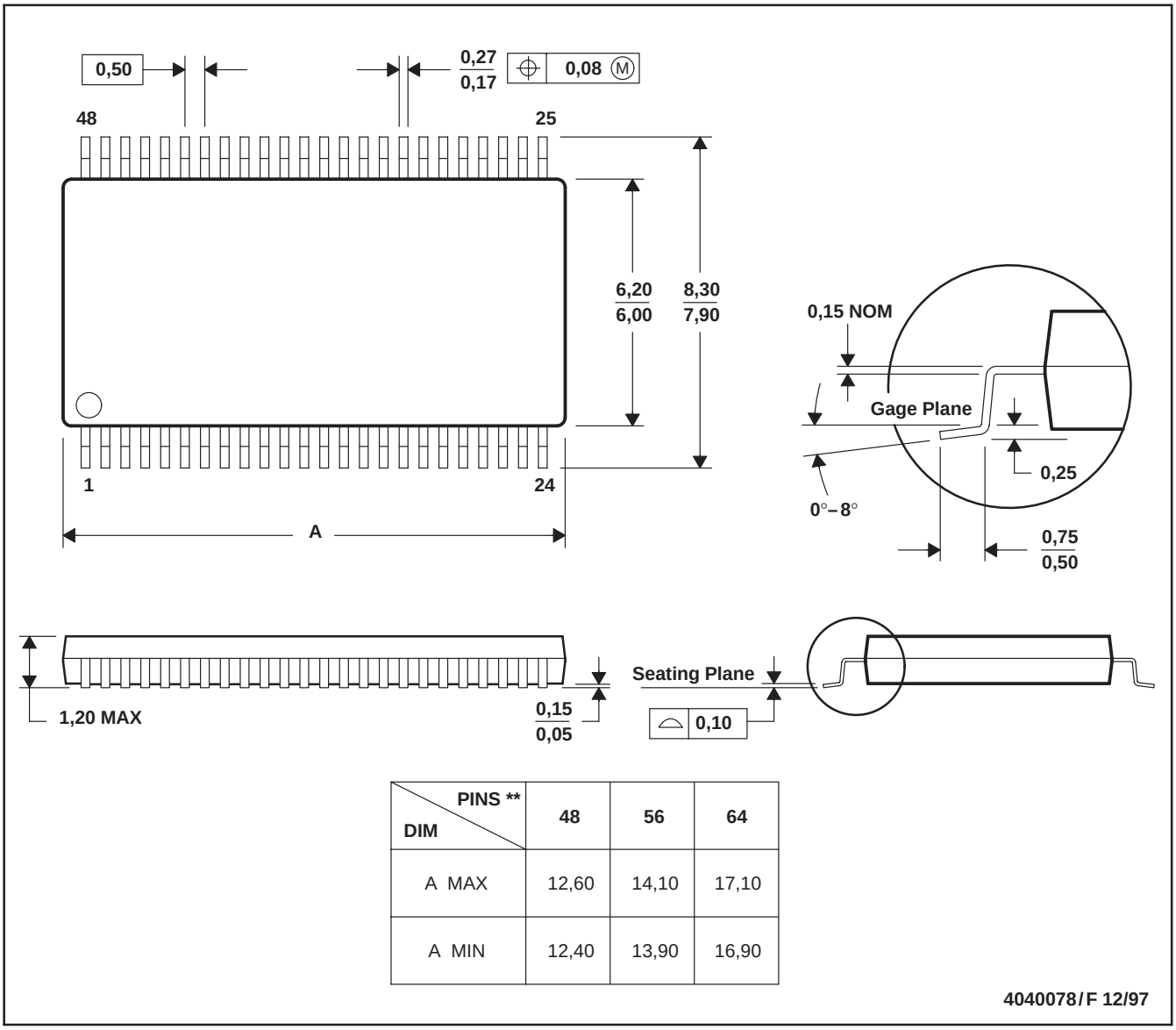

DIM \ PINS **	48	56	64
A MAX	12,60	14,10	17,10
A MIN	12,40	13,90	16,90

NOTES: A. All linear dimensions are in millimeters.
B. This drawing is subject to change without notice.
C. Body dimensions do not include mold protrusion not to exceed 0,15.
D. Falls within JEDEC MO-153

PACKAGE OUTLINE

ZQL0056A

JRBGA - 1 mm max height

PLASTIC BALL GRID ARRAY

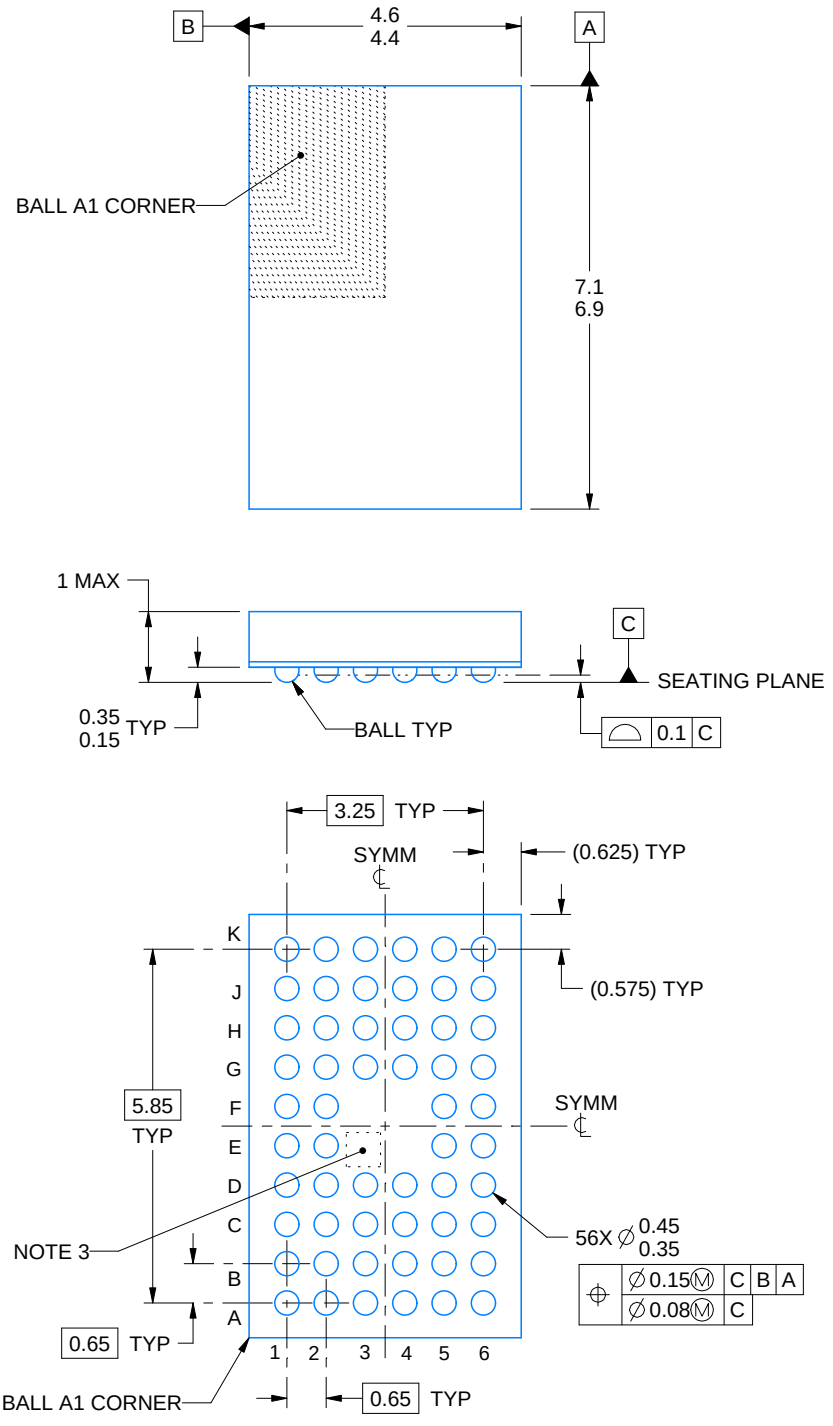

4219711/B 01/2017

NOTES:

1. All linear dimensions are in millimeters. Any dimensions in parenthesis are for reference only. Dimensioning and tolerancing per ASME Y14.5M.
2. This drawing is subject to change without notice.
3. No metal in this area, indicates orientation.

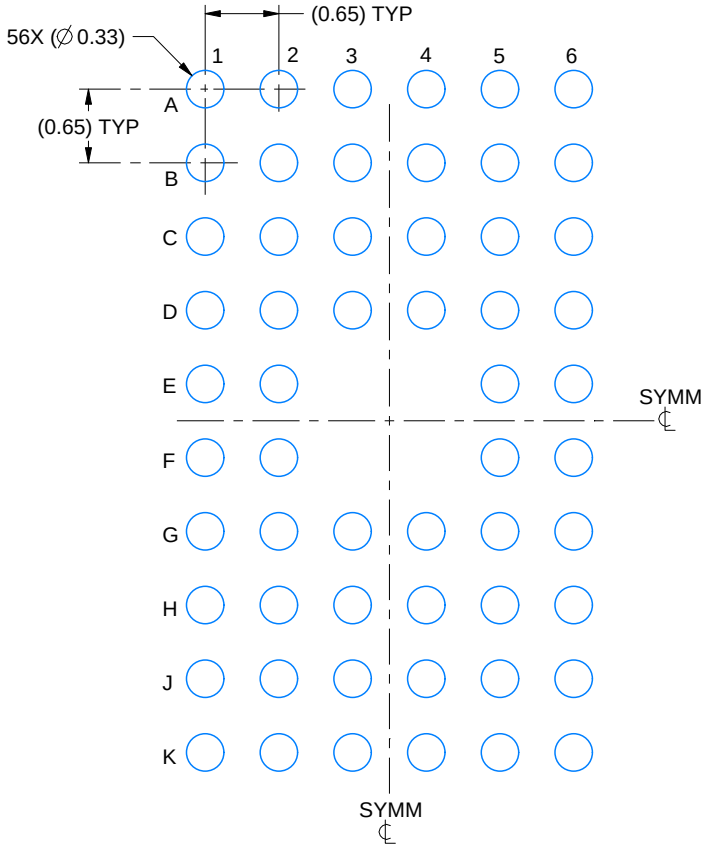

LAND PATTERN EXAMPLE
EXPOSED METAL SHOWN
SCALE:15X

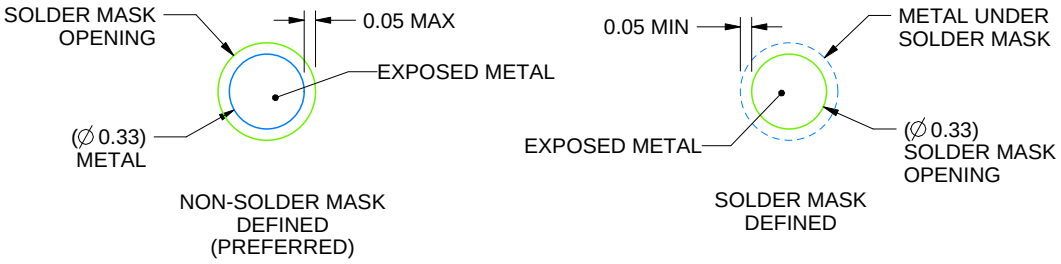

SOLDER MASK DETAILS
NOT TO SCALE

4219711/B 01/2017

NOTES: (continued)

4. Final dimensions may vary due to manufacturing tolerance considerations and also routing constraints. For information, see Texas Instruments literature number SPRAA99 (www.ti.com/lit/spraa99).

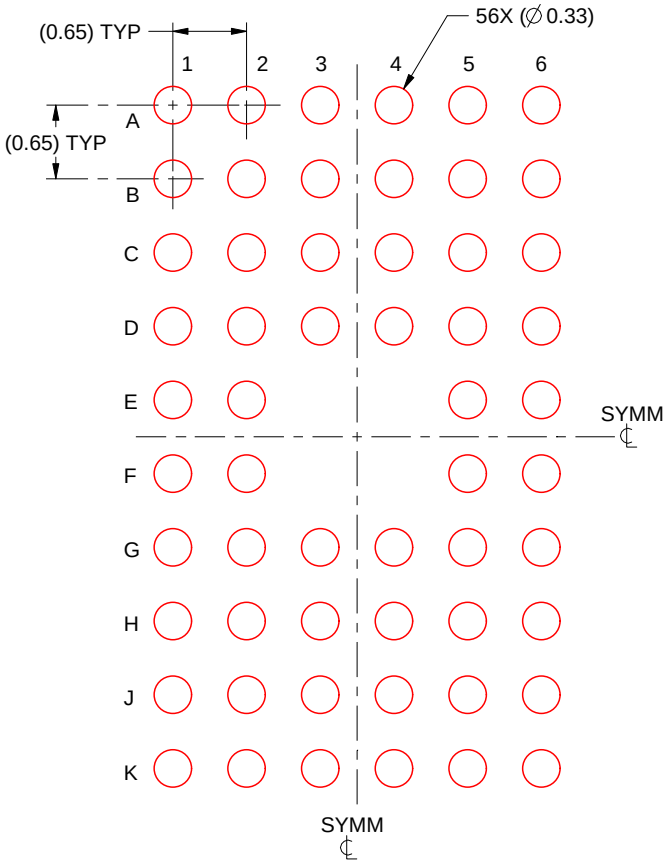

SOLDER PASTE EXAMPLE
BASED ON 0.125 mm THICK STENCIL
SCALE:15X

4219711/B 01/2017

NOTES: (continued)

5. Laser cutting apertures with trapezoidal walls and rounded corners may offer better paste release.

DL (R–PDSO–G48) PLASTIC SMALL–OUTLINE PACKAGE

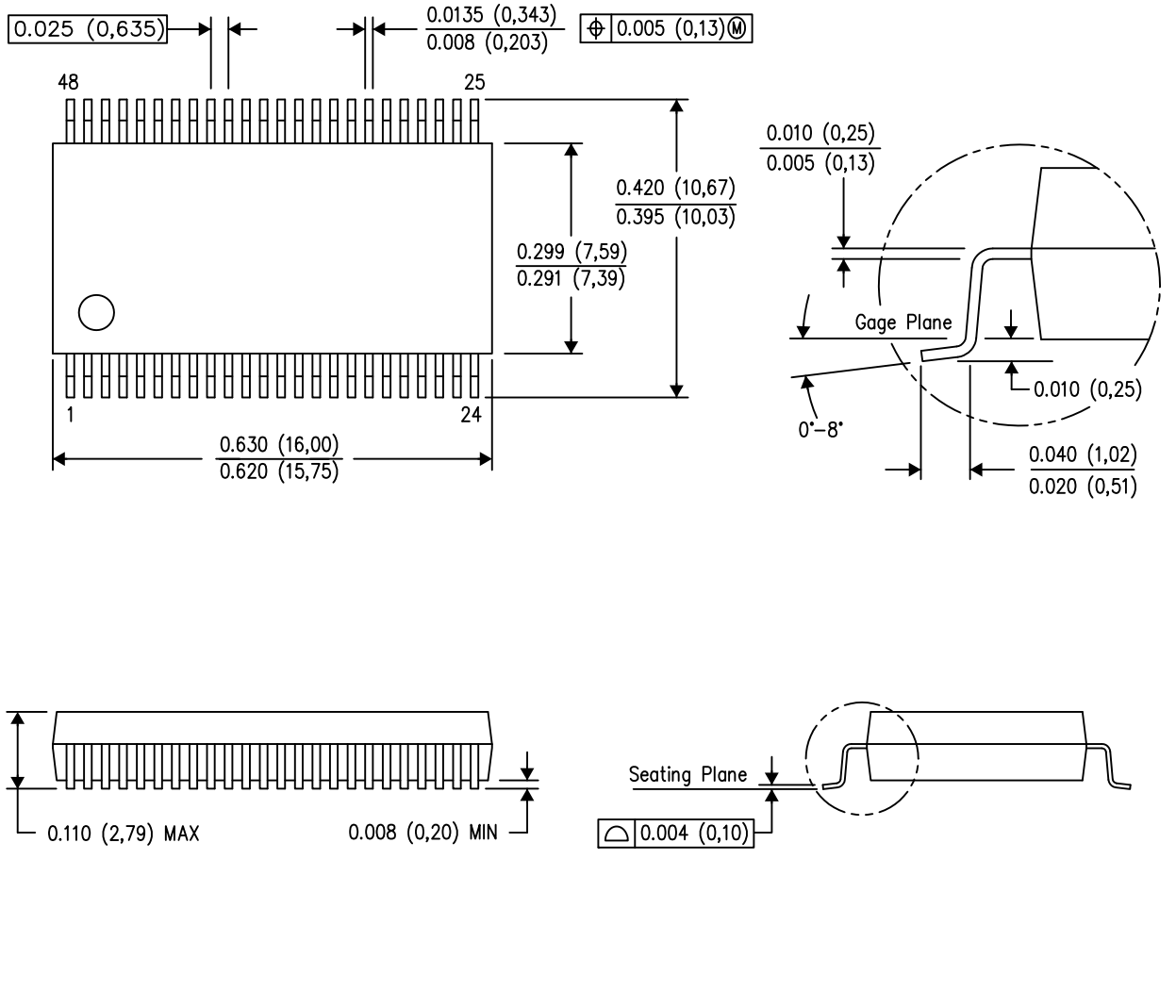

NOTES:
A. All linear dimensions are in inches (millimeters).
B. This drawing is subject to change without notice.
C. Body dimensions do not include mold flash or protrusion not to exceed 0.006 (0,15).
D. Falls within JEDEC MO–118

PowerPAD is a trademark of Texas Instruments.

GRD (R–PBGA–N54) PLASTIC BALL GRID ARRAY

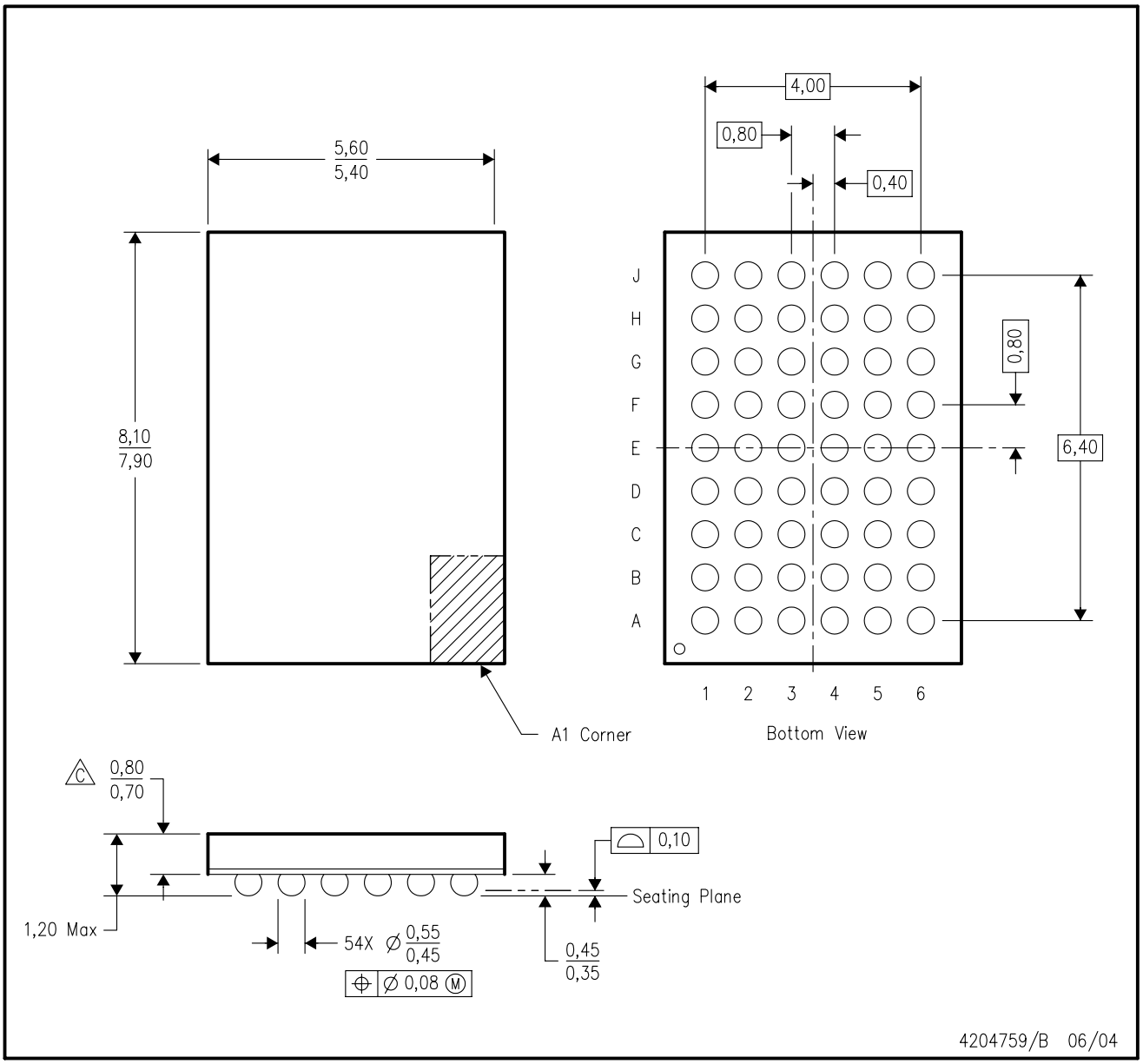

NOTES:
A. All linear dimensions are in millimeters.
B. This drawing is subject to change without notice.
C. Falls within JEDEC MO–205 variation DD.
D. This package is tin–lead (SnPb). Refer to the 54 ZRD package (drawing 4204760) for lead–free.

GQL (R–PBGA–N56) PLASTIC BALL GRID ARRAY

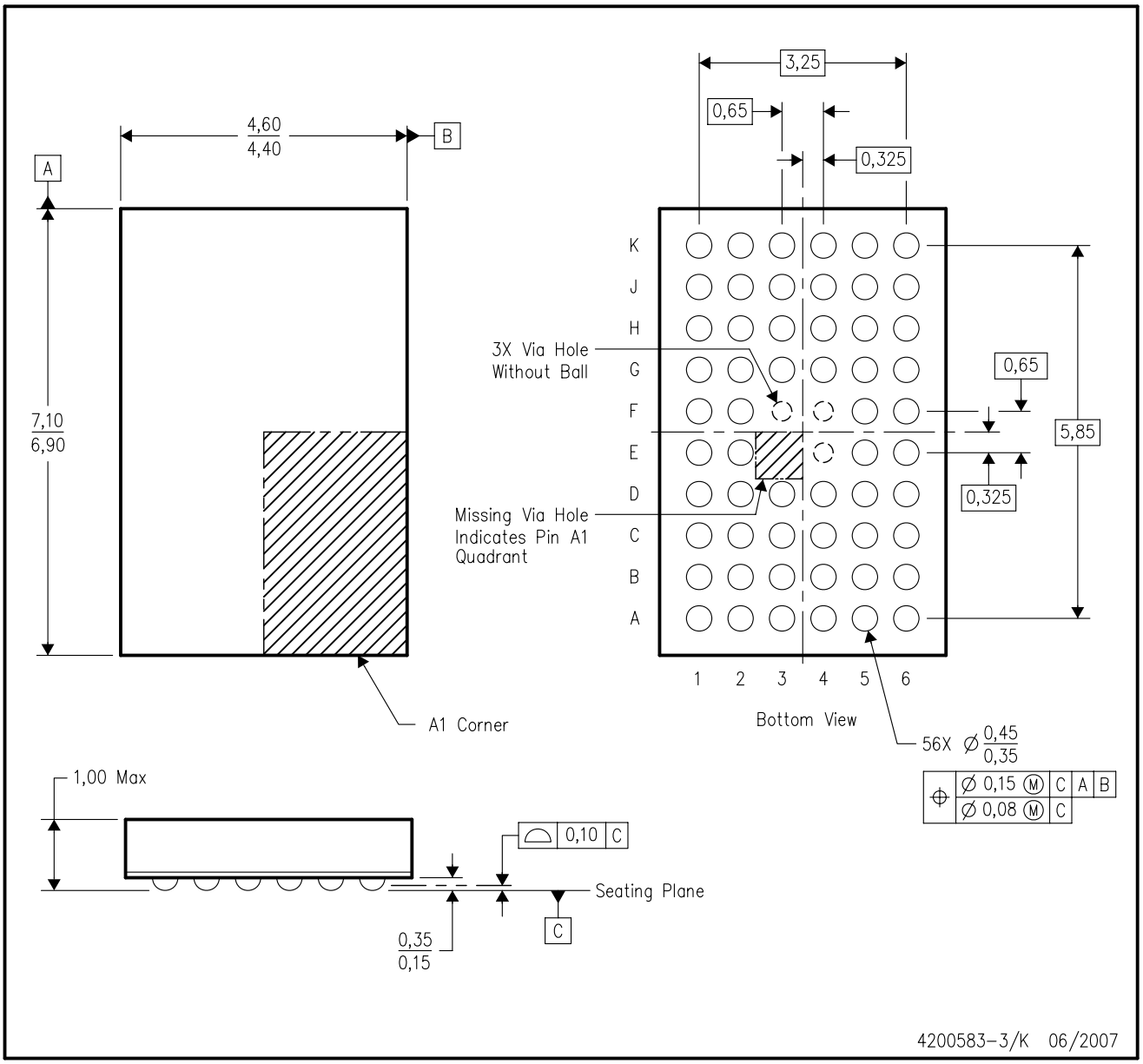

NOTES:
A. All linear dimensions are in millimeters. Dimensioning and tolerancing per ASME Y14.5M–1994.
B. This drawing is subject to change without notice.
C. Falls within JEDEC MO–285 variation BA–2.
D. This package is tin–lead (SnPb). Refer to the 56 ZQL package (drawing 4204437) for lead–free.

ZRD (R–PBGA–N54) PLASTIC BALL GRID ARRAY

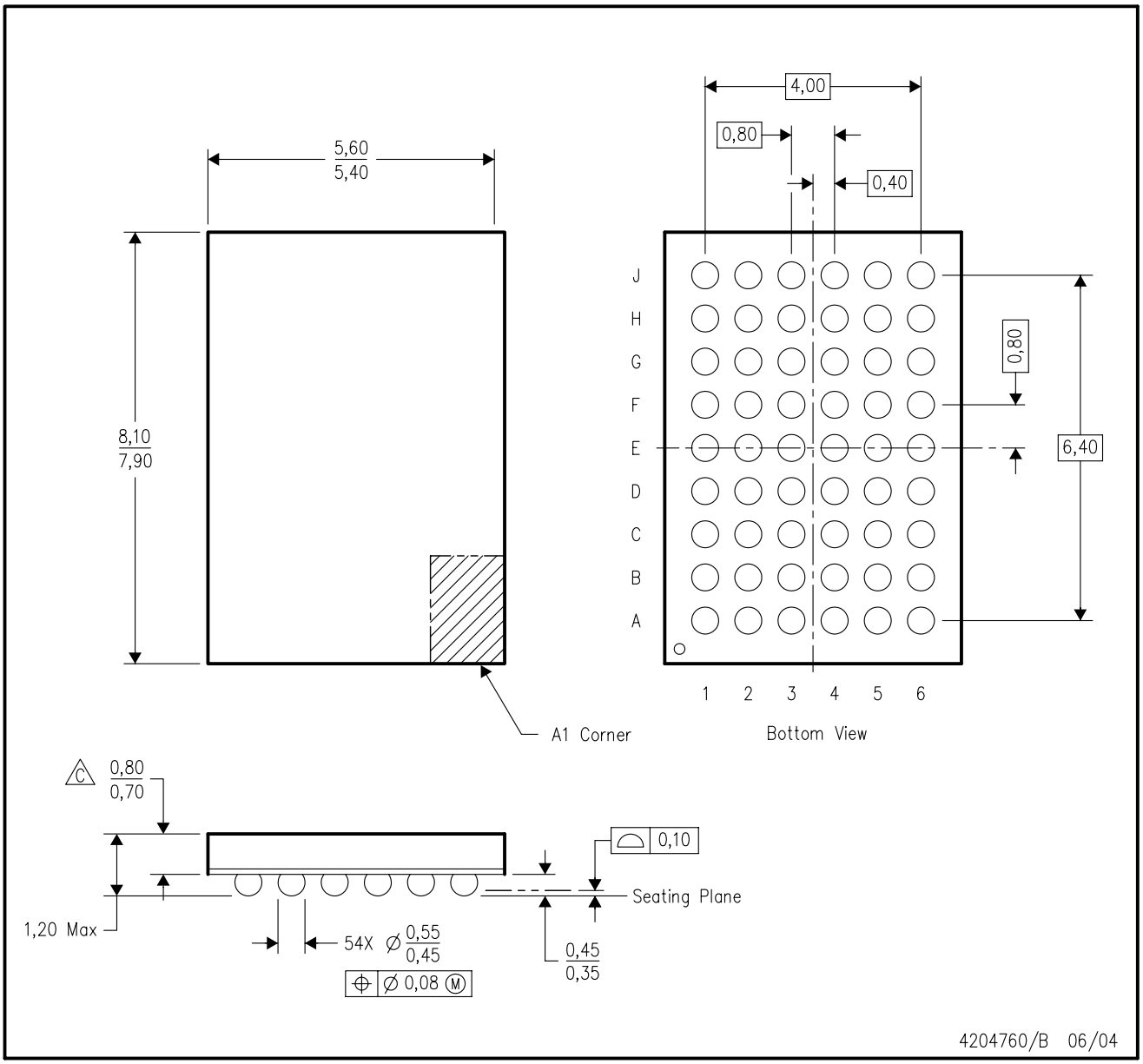

NOTES:
A. All linear dimensions are in millimeters.
B. This drawing is subject to change without notice.
C. Falls within JEDEC MO–205 variation DD.
D. This package is lead–free. Refer to the 54 GRD package (drawing 4204759) for tin–lead (SnPb).

IMPORTANT NOTICE FOR TI DESIGN INFORMATION AND RESOURCES

Texas Instruments Incorporated ('TI") technical, application or other design advice, services or information, including, but not limited to, reference designs and materials relating to evaluation modules, (collectively, "TI Resources") are intended to assist designers who are developing applications that incorporate TI products; by downloading, accessing or using any particular TI Resource in any way, you (individually or, if you are acting on behalf of a company, your company) agree to use it solely for this purpose and subject to the terms of this Notice.

TI's provision of TI Resources does not expand or otherwise alter TI's applicable published warranties or warranty disclaimers for TI products, and no additional obligations or liabilities arise from TI providing such TI Resources. TI reserves the right to make corrections, enhancements, improvements and other changes to its TI Resources.

You understand and agree that you remain responsible for using your independent analysis, evaluation and judgment in designing your applications and that you have full and exclusive responsibility to assure the safety of your applications and compliance of your applications (and of all TI products used in or for your applications) with all applicable regulations, laws and other applicable requirements. You represent that, with respect to your applications, you have all the necessary expertise to create and implement safeguards that (1) anticipate dangerous consequences of failures, (2) monitor failures and their consequences, and (3) lessen the likelihood of failures that might cause harm and take appropriate actions. You agree that prior to using or distributing any applications that include TI products, you will thoroughly test such applications and the functionality of such TI products as used in such applications. TI has not conducted any testing other than that specifically described in the published documentation for a particular TI Resource.

You are authorized to use, copy and modify any individual TI Resource only in connection with the development of applications that include the TI product(s) identified in such TI Resource. NO OTHER LICENSE, EXPRESS OR IMPLIED, BY ESTOPPEL OR OTHERWISE TO ANY OTHER TI INTELLECTUAL PROPERTY RIGHT, AND NO LICENSE TO ANY TECHNOLOGY OR INTELLECTUAL PROPERTY RIGHT OF TI OR ANY THIRD PARTY IS GRANTED HEREIN, including but not limited to any patent right, copyright, mask work right, or other intellectual property right relating to any combination, machine, or process in which TI products or services are used. Information regarding or referencing third-party products or services does not constitute a license to use such products or services, or a warranty or endorsement thereof. Use of TI Resources may require a license from a third party under the patents or other intellectual property of the third party, or a license from TI under the patents or other intellectual property of TI.

TI RESOURCES ARE PROVIDED "AS IS" AND WITH ALL FAULTS. TI DISCLAIMS ALL OTHER WARRANTIES OR REPRESENTATIONS, EXPRESS OR IMPLIED, REGARDING TI RESOURCES OR USE THEREOF, INCLUDING BUT NOT LIMITED TO ACCURACY OR COMPLETENESS, TITLE, ANY EPIDEMIC FAILURE WARRANTY AND ANY IMPLIED WARRANTIES OF MERCHANTABILITY, FITNESS FOR A PARTICULAR PURPOSE, AND NON-INFRINGEMENT OF ANY THIRD PARTY INTELLECTUAL PROPERTY RIGHTS.

TI SHALL NOT BE LIABLE FOR AND SHALL NOT DEFEND OR INDEMNIFY YOU AGAINST ANY CLAIM, INCLUDING BUT NOT LIMITED TO ANY INFRINGEMENT CLAIM THAT RELATES TO OR IS BASED ON ANY COMBINATION OF PRODUCTS EVEN IF DESCRIBED IN TI RESOURCES OR OTHERWISE. IN NO EVENT SHALL TI BE LIABLE FOR ANY ACTUAL, DIRECT, SPECIAL, COLLATERAL, INDIRECT, PUNITIVE, INCIDENTAL, CONSEQUENTIAL OR EXEMPLARY DAMAGES IN CONNECTION WITH OR ARISING OUT OF TI RESOURCES OR USE THEREOF, AND REGARDLESS OF WHETHER TI HAS BEEN ADVISED OF THE POSSIBILITY OF SUCH DAMAGES.

You agree to fully indemnify TI and its representatives against any damages, costs, losses, and/or liabilities arising out of your non-compliance with the terms and provisions of this Notice.

This Notice applies to TI Resources. Additional terms apply to the use and purchase of certain types of materials, TI products and services. These include; without limitation, TI's standard terms for semiconductor products http://www.ti.com/sc/docs/stdterms.htm), evaluation modules, and samples (http://www.ti.com/sc/docs/sampterms.htm).

Mailing Address: Texas Instruments, Post Office Box 655303, Dallas, Texas 75265
Copyright © 2017, Texas Instruments Incorporated